INSIDE:

SolidWorks 2007 Tutorial

with MultiMedia CD

A Step-by-Step Project Based Approach Utilizing 3D Solid Modeling

David C. Planchard & Marie P. Planchard

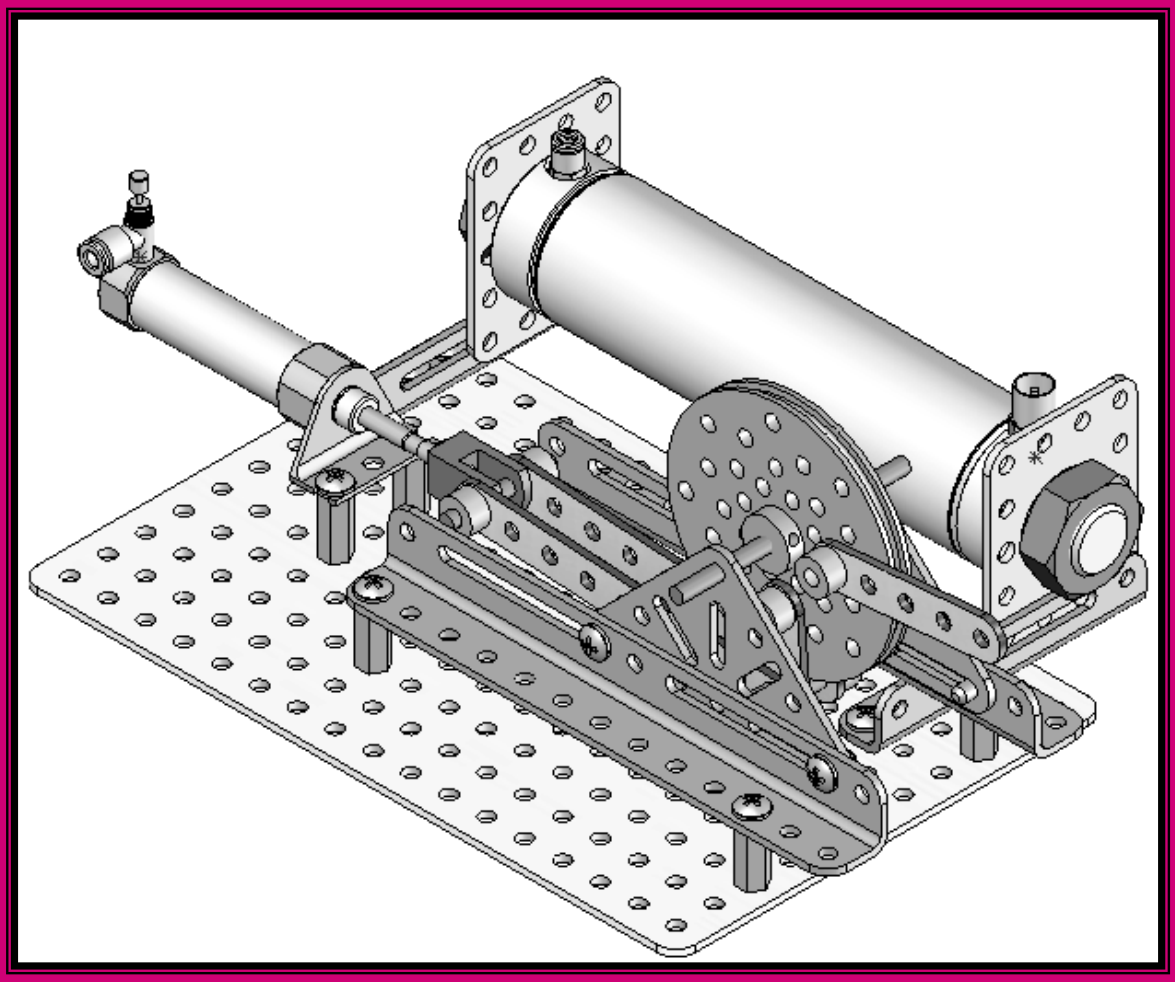

SDC
PUBLICATIONS

Schroff Development Corporation

www.schroff.com
www.schroff-europe.com

SolidWorks Solution Partner

TABLE OF CONTENTS

Appendix

Index