INSIDE:

The Fundamentals of SolidWorks® 2008

Featuring the VEXplorer™ robot with over 50 integrated stand alone tutorials and Supplemental materials on the CO_2 Race Car and Vex Robotics Design System

By David C. Planchard & Marie P. Planchard CSWP

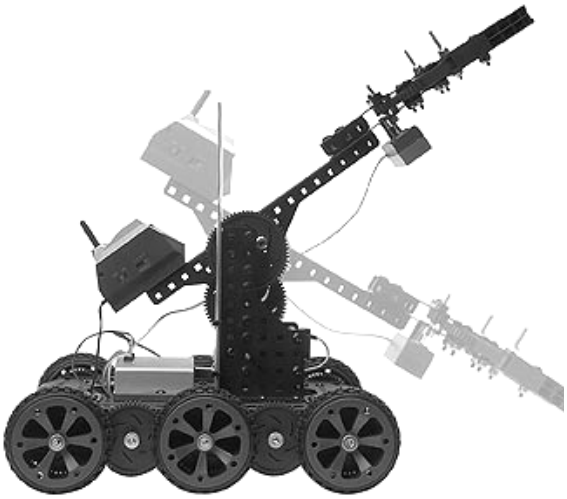

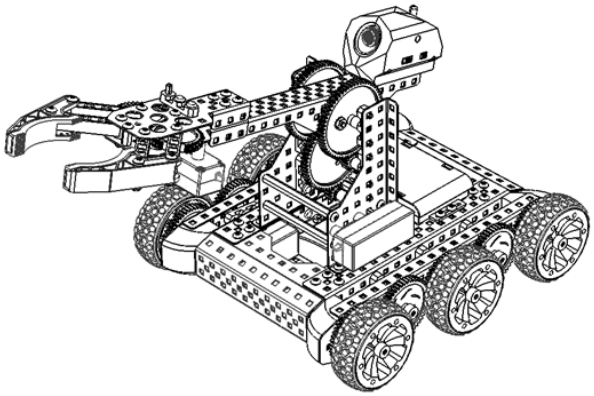

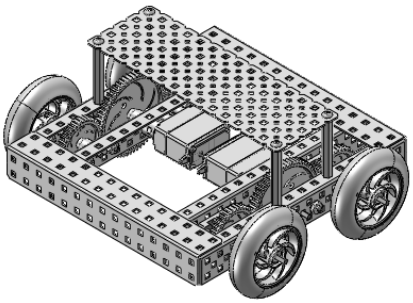

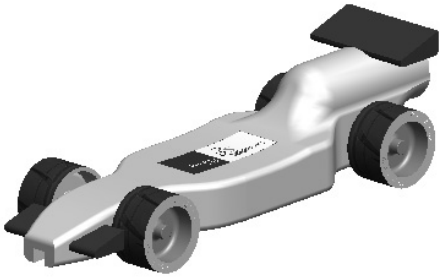

SDC
PUBLICATIONS
Schroff Development Corporation
www.schroff.com

SolidWorks Solution Partner

TABLE OF CONTENTS

Introduction	**I-1**
Goals of the book	I-1
How the book is organized	I-3
Syntax and organization of the book	I-6
About the authors	I-6
Dedication	I-7
Contact the authors	I-7
Notes to Instructors	I-7
Trademarks, Copyrighted Material	I-8
References	I-8
Chapter 1 – Quick Start	**1-1**
Chapter Objective	1-1
What is SolidWorks?	1-2
Basic Concepts in SolidWorks	1-2
Starting a SolidWorks Session	1-4
Tutorial: Starting a SolidWorks Session 1-1	1-4
SolidWorks User Interface (UI)	1-5
Menu bar toolbar	1-5
Menu bar menu	1-5
Right-click Pop-up menu	1-6
Consolidated menus	1-7
System feedback icons	1-7
Confirmation Corner	1-8
Heads-up View toolbar	1-8
CommandManager	1-10
FeatureManager Design Tree	1-13
Fly-out FeatureManager	1-14
Task Pane	1-15
Design Library	1-15
File Explorer	1-16
Search	1-16
View Palette	1-16
RealView	1-17
Document Recovery	1-17
Motion Study / Annotation tab	1-17
Create a New Part	1-19
Tutorial: New Part - Standoff 1-2	1-19
Create a New Assembly	1-26
Tutorial: New Assembly - Gear 1-3	1-26
Create a New Assembly Drawing	1-30
Tutorial: New Assembly Drawing - Gear 1-4	1-30
Summary	1-33

Key terms 1-34
Check your understanding 1-35

Chapter 2: Cover Part, SimpleGear Part, and Gear Extension Part 2-1
Chapter Objective 2-1
Cover Part Overview 2-1
Tutorial: New Part - Cover 2-1 2-2
Shell Feature 2-4
Tutorial: Insert a Shell feature 2-2 2-4
View Orientation and Display Style 2-5
Tutorial: Apply Views/Styles 2-3 2-5
Extruded Cut feature / Offset Sketch 2-6
Tutorial: Insert an Extruded Cut feature 2-4 2-6
Extruded Cut feature, Hole 2-7
Tutorial: Insert an Extruded Cut feature 2-5 2-7
Linear Pattern feature 2-8
Tutorial: Insert a Linear Pattern feature 2-6 2-9
Fillet feature 2-10
Tutorial: Insert a Fillet feature 2-7 2-10
Tutorial: Apply color to a model feature 2-8 2-11
Simple Gear Part Overview 2-12
Mirror feature 2-12
Circular Pattern feature 2-12
Tutorial: Insert a Mirror feature and Circular Pattern feature 2-9 2-12
Gear Extension Part Overview 2-17
Tutorial: New Part - Gear Extension 2-10 2-17
Tutorial: Mirror feature - Gear Extension 2-11 2-19
Tutorial: Linear Pattern - Gear Extension 2-12 2-21
Tutorial: Circular Pattern - Gear Extension 2-13 2-23
Summary 2-24
Key terms 2-25
Check your understanding 2-25

Chapter 3: Assembly Modeling 3-1
Chapter Objective 3-1
Assembly Modeling Technique 3-1
Mate Overview 3-2
Standard Mates 3-3
Coincident 3-3
Parallel 3-3
Perpendicular 3-3
Tangent 3-3
Concentric 3-3
Lock 3-3
Distance 3-3
Angle 3-3

Mate alignment 3-3
Insert a Component 3-4
Tutorial: Insert Component - Claw Assembly 3-1 3-4
Exploded View tool 3-7
Tutorial: Explode / Animate Assembly 3-2 3-7
Create the VEXplorer Assembly 3-8
Tutorial: VEXplorer Assembly 3-3 3-8
SmartMates 3-14
Types of SmartMates 3-15
Tutorial: Insert SmartMates 3-4 3-15
Measure tool 3-17
Tutorial: Measure tool 3-5 3-17
Mass Properties tool 3-18
Tutorial: Mass Properties tool 3-6 3-18
SolidWorks Design Library 3-19
Tutorial: SolidWorks Design Library 3-7 3-19
Summary 3-20
Key terms 3-21
Check your understanding 3-22

Chapter 4: Multiple View / Sheet Drawings and eDrawing 4-1
Chapter Objective 4-1
Drawings 4-1
Mouse Cursor Feedback 4-1
Edge 4-1
Face 4-1
Vertex 4-1
Dimension 4-1
Sheet Format, Size, and Properties 4-3
Tutorial: Sheet Properties / Drawing mode 4-1 4-3
Tutorial: Title Block / Custom Properties 4-2 4-4
View Palette 4-5
Tutorial: View Palette tool 4-3 4-5
View Layout toolbar 4-7
Model View tool 4-7
Tutorial: Model View tool 4-4 4-7
Annotations toolbar 4-9
Tutorial: Note tool 4-5 4-9
Tutorial: DimXpert / Drawing 4-6 4-9
Projected View tool 4-10
Tutorial: Projected View tool / Add Sheet 4-7 4-10
Model Items tool 4-12
Tutorial: Model Items tool 4-8 4-12
AutoBalloon tool 4-13
Tutorial: AutoBalloon tool 4-9 4-13
Bill of Materials tool 4-10 4-13

Tutorial: Bill of Materials tool 4-10 4-13
eDrawings 4-14
Tutorial: eDrawing 4-11 4-15
Summary 4-16
Key terms 4-16
Check your understanding 4-16

Chapter 5: PhotoWorks, COSMOSXpress, and Motion Study 5-1
Chapter Objectives 5-1
PhotoWorks toolbar 5-1
Tutorial: Activate PhotoWorks 5-1 5-2
PhotoWorks Studio tool 5-2
Tutorial: PhotoWorks Studio tool 5-2 5-2
Scene tool 5-4
Tutorial: PhotoWorks Scene tool 5-3 5-4
Tutorial: PhotoWorks Decal tool 5-4 5-5
COSMOSXpress 5-5
COSMOSXpress User Interface 5-5
Tutorial: COSMOSXpress 5-5 5-8
MotionManager 5-11
Tutorial: MotionManager 5-6 5-11
Summary 5-12
Key terms 5-12
Check your understanding 5-12

Chapter 6: CO_2 Car and Vex Robotics Design System 6-1
Chapter Overview 6-1
F1 in Schools™ Design Project 6-1
Tutorial: Modify the Rear Wing 6-1 6-2
Rollback bar 6-2
Exit Feature tool 6-2
Exit Sketch tool 6-3
Tutorial: Modify the Front Wing 6-2 6-3
Open Part 6-4
Tutorial: Open Components from the CO_2 Race Car Assembly 6-3 6-4
Measure tool 6-5
Tutorial: Measure tool – compare to a design standard 6-4 6-5
Mass Properties tool 6-6
Tutorial: Mass Properties tool – compare to a design standard 6-5 6-6
Vex Robotics Design System 6-7
Tutorial: Open the Vex Robotics Chassis Assembly 6-6 6-8
SolidWorks Toolbar 6-9

Appendix **A-1**
Check your understanding answer key A-1
Chapter 1 A-1
Chapter 2 A-2
Chapter 3 A-3
Chapter 4 A-4
Chapter 5 A-5

Index **I-1**